30DSERIES

turbofan®

TECHNICAL DATA SHEET FOR

G32D5 ON THE SK32 STAND

Full Size Digital / Gas Convection Oven on a Stainless Steel Stand

STANDARD FEATURES

- 5 full size sheet pan capacity
- 3⅓" / 85mm tray spacing
- Compact 28⅞" / 735mm width
- 110-120V plug-in
- 15A NEMA 5-15P cordset fitted
- Digital display Time and Temperature Controls
- Large easy view ¾" / 20mm high displays
- Electronic thermostat control
- Electronic burner ignition and safety control system
- Electronic timer with countdown or time count modes
- Programmable for up to 20 programs
- Water Injection mode
- Bi-directional fan motor
- 33,000 Btu/hr patented Infrared burner system
- Safe-Touch vented side hinged door (standard LH hinge). Optional RH hinge (field convertible)
- Stay-Cool door handle
- Porcelain enameled oven chamber
- Plug-in continuous oven door seal
- Dual halogen oven lamps
- Anti-skid 2" / 50mm dia. 4" / 102mm high adjustable stainless steel feet
- 5 oven wire racks supplied
- 100% recyclable packaging

ACCESSORIES

- Turbofan SK32 Oven Stand

G32D5

Unit shall be a Moffat gas heated Turbofan convection oven NSF-4 and CSA listed. The oven shall have a one piece porcelain enameled oven chamber, stainless top and sides and safe touch vented easy clean side hinged door that offers field reversible hinging. Oven shall have capacity for five full size sheet pans. The oven shall be controlled by an electronic control having separate digital displays and adjusting knobs for time and temperature functions. The oven control shall allow both manual and programmed operating modes and have separate control keys for water injection, oven light function and timer operation. The unit shall include dual halogen oven lamps. Oven shall be able to be bench mounted on 3" / 76mm feet or mounted on oven stand model SK32. Unit shall be supplied in 100% recyclable shipping packaging.

SK32

Unit shall be a Moffat Turbofan stainless steel oven stand NSF-4 listed. The stand shall be constructed from stainless steel tube with castors, with front castors having dual swivel and wheel locks. It shall be fitted with 6 tray runners suitable for up to 12 half size sheet pans or 6 full size sheet pans. The stand shall be fully compatible with, and support, Turbofan Convection Oven models E32D and G32D. Unit shall be supplied in 100% recyclable shipping packaging.

MOFFAT®

turbofan®
CONVECTION OVEN SYSTEMS

Kitchenall

30DSERIES

turbofan®

G32D5 Full Size Digital / Gas Convection Oven on a Stainless Steel Stand

CONSTRUCTION
Porcelain enameled fully welded oven chamber
Stainless steel front, sides and top exterior
Stainless steel oven fan baffle and oven vent
Removable 5 position stainless steel side racks
Oven racks chrome plated wire (5 supplied)
Stainless steel frame side hinged door
0.2" / 5mm thick door outer glass
0.2" / 5mm thick low energy loss door inner glass
Full stainless steel welded door handle
Stainless steel control panel
Aluminized coated steel base and rear panels

CONTROLS
Electronic controls with Digital Time and Temperature display, Manual or Program modes
Large ¾" / 20mm high LED displays
Two individual time and temperature setting control knobs
6 function keys
ON/OFF key
Oven Lamp key (toggle or auto-time off mode settings)
Timer Start/Stop key
Water Injection key (manual shot or timed shot mode settings)
Programs select key
Actual temperature display key
Adjustable buzzer/alarm volume
Thermostat range 150-550°F / 50-260°C
Timer range from 180 minutes in countdown mode
Timer range up to 999 minutes in time count mode for holding, slow cooking
Direct burner ignition control flame failure safety control
Over-temperature safety cut-out

CLEANING
Stainless steel top and side exterior panels
Porcelain enameled oven chamber
Fully removable stainless steel oven side racks
Removable stainless steel oven fan baffle
Easy clean door system with hinge out door inner glass (no tools required)
Removable plug-in oven door seal (no tools required)
3" / 76mm high stainless steel feet for easy access underside

SPECIFICATIONS
Electrical Requirements
110-120V, 60Hz, 1-phase, 1A
NEMA 5-15P cordset fitted

Gas Requirements
33,000 Btu/hr / 35MJ/hr burner rating
Natural, Propane/Butane models
Unit supplied complete with gas type conversion kit

Gas Connection
½" NPT male

Water Requirements (optional)
Cold water connection ¾" GHT male
80psi maximum inlet pressure / 20psi minimum inlet pressure

External Dimensions

Width	28⅞" / 735mm
Height	35⅞" / 910mm including 4" / 102mm feet
Depth	31⅞" / 810mm

Oven Internal Dimensions

Width	18¼" / 465mm
Height	20¼" / 515mm
Depth	27½" / 700mm
Volume	6ft³ / 0.17m3

Oven Rack Dimensions
Width 18" / 460mm
Depth 26" / 660mm

Nett Weight (G32D5)
250lbs / 113kg

Packing Data (G32D5)
289lbs / 131kg
25ft³ / 0.71m3

Width	29⅞" / 760mm
Height	39¾" / 1010mm
Depth	36⅜" / 925mm

SK32 Stainless Steel Stand

All stainless steel welded frame oven stand for Turbofan E32D and G32D Series ovens
6 position tray runners standard
3" / 76mm diameter wheel swivel castors standard with 2 front castors with dual swivel and wheel
Welded 1½" and 1¼" square tube front and rear frames
Welded rack supports/side frames
4 dia. 3" / 76mm swivel castors with 2 front castors dual wheel and swivel lock
Top frame oven supports suit Turbofan E32D and G32D Series oven mounting
Supplied CKD for assembly on site

External Dimensions (SK32 Oven Stand)

Width	28⅞" / 735mm
Height	34⅝" / 880mm
Depth	25⅝" / 650mm

Nett Weight (SK32 Oven Stand)
40lbs / 18.5kg

Packing Data (SK32 Oven Stand)
51lbs / 23kg
3.5ft³ / 0.1m3

Width	32⅝" / 830mm
Height	35 ½" / 900mm
Depth	6" / 152mm

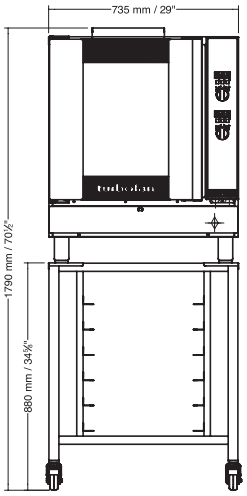

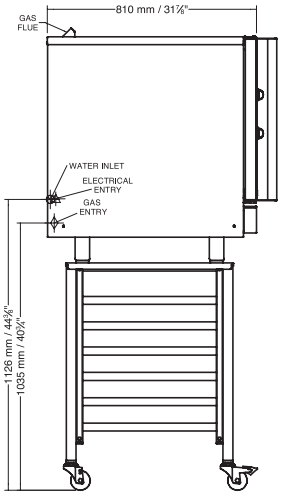

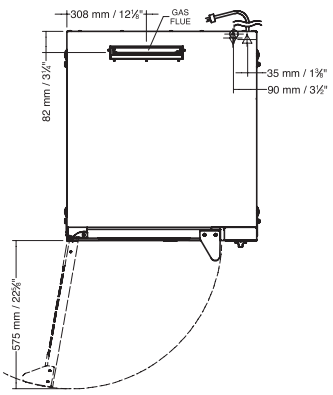

MOFFAT®

www.moffat.com

U.S.A.
Moffat Inc
3765 Champion Boulevard
Winston-Salem
North Carolina 27105
Ph Toll Free 1-800-551 8795
Ph 336-661 0257
Fax 336-661 9546
Email sales@moffat.com
www.moffat.com

Manufactured by:
Moffat Limited
16 Osborne Street PO Box 10-001
Christchurch 8081 New Zealand

ISO9001
Quality Management Standard

Designed and manufactured by
MOFFAT®

ISO9001
All Turbofan products are designed and manufactured by Moffat using the internationally recognised ISO9001 quality management system, covering design, manufacture and final inspection, ensuring consistent high quality at all times.

In line with policy to continually develop and improve its products, Moffat Limited reserves the right to change specifications and design without notice.

© Copyright Moffat Ltd
Moffat 5.10