TECHNICAL DATA SHEET FOR

E22M3 ON THE SK23 STAND

Half Size Manual / Electric Convection Oven on a Stainless Steel Stand

STANDARD FEATURES

- 3 half size sheet pan capacity
- 2⅝"/ 70mm tray spacing
- Compact 24"/ 610mm width
- Single direction low-velocity fan
- 1.5kW heating power
- 110-120V plug-in 15A NEMA 5-15P cordset fitted
- Porcelain enameled oven chamber
- Plug-in continuous oven door seal
- Safe-Touch vented drop down door
- Stay-Cool door handle
- Heavy-duty door hinges
- Easy clean door glass system
- Mechanical thermostat 150-500°F / 50-260°C
- 60 minute timer with time up alarm
- Anti-skid 2" / 50mm dia. 3" /76mm high adjustable stainless steel feet
- 3 oven wire racks supplied
- 100% recyclable packaging

ACCESSORIES

- Turbofan SK23 Oven Stand

E22M3

Unit shall be a Moffat electrically heated Turbofan convection oven E.T.L. listed and NSF-4 listed. The oven shall have a one piece porcelain enameled oven chamber, stainless top and sides and safe touch vented easy clean drop down door. Oven shall have capacity for three half size sheet pans. The oven shall have a single direction low velocity fan system. The oven shall be controlled by a mechanical thermostat with a range of 150-500°F / 50-260°C, and 60 minute bake timer. Oven shall be able to be bench mounted on 3" / 76mm feet or mounted on oven stand model SK23. Oven shall be fitted with a NEMA 5-15P cordset. Unit shall be supplied in 100% recyclable shipping packaging.

SK23

Unit shall be a Moffat Turbofan stainless steel oven stand NSF-4 listed. The stand shall be constructed from stainless steel tube with castors, with front castors having dual swivel and wheel locks. It shall be fitted with 6 tray runners suitable for half size sheet pans. The stand shall be fully compatible with, and support, Turbofan Convection Oven models E22M2 and E23M3. Unit shall be supplied in 100% recyclable shipping packaging.

20MSERIES

E22M3

turbofan®

E22M3 Half Size Manual / Electric Convection Oven on a Stainless Steel Stand

CONSTRUCTION
Porcelain enameled fully welded oven chamber
Stainless steel front, sides and top exterior
Stainless steel oven fan baffle
Removable 3 position chrome plated wire side racks
Oven racks chrome plated wire (3 supplied)
Stainless steel frame drop down hinged door
0.2" / 5mm thick door outer glass
0.2" / 5mm thick low energy loss door inner glass
Heavy-duty counterbalanced door hinges
Wear resistant powder coated welded door handle
Stainless steel control panel
Aluminized coated steel base and rear panels

CONTROLS
Power ON control panel indicator
Mechanical thermostat 150-500°F / 50-260°C
Heating ON control panel indicator
Manual 60 minute timer
Time-Up control panel indicator and buzzer

CLEANING
Stainless steel top and sides continuous exterior panel
Porcelain enameled oven chamber
Fully removable chrome plated oven side racks
Removable stainless steel oven fan baffle
Easy clean door system with hinge out door inner glass (no tools required)
Removable plug-in oven door seal (no tools required)
3" / 76mm high stainless steel feet for easy access underside

SPECIFICATIONS

Electrical Requirements
110-120V, 50/60Hz, 1-phase, 1.5kW, 12A
NEMA 5-15P cordset fitted

External Dimensions

Width	24" / 610mm
Height	21¾" / 552mm including 3" / 76mm feet
Depth	23⅞" / 608mm

Oven Internal Dimensions

Width	19½" / 495mm
Height	10" / 250mm
Depth	13⅜" / 340mm
Volume	1.48ft³ / 0.042m3

Oven Rack Dimensions
Width 18" / 460mm
Depth 13" / 330mm

Nett Weight (E22M3)
78lbs / 35.4kg

Packing Data (E22M3)
106lbs / 48kg
12 ft³ / 0.34m3

Width	29½" / 750mm
Height	27¾" / 705mm
Depth	25" / 635mm

SK23 Stainless Steel Stand

All stainless steel welded frame oven stand for Turbofan E22 and E23 Series ovens
6 position tray runners standard
3" / 76mm diameter wheel swivel castors standard with 2 front castors with dual swivel and wheel
Welded 1½" and 1¼" square tube front and rear frames
Welded rack supports/side frames
4 dia. 3" / 76mm swivel castors with 2 front castors dual wheel and swivel lock
Top frame oven supports suit Turbofan E22 and E23 Series Oven mounting
Supplied CKD for assembly on site

External Dimensions (SK23 Oven Stand)

Width	24" / 610mm
Height	34⅝" / 880mm
Depth	20⅞" / 530mm

Nett Weight (SK23 Oven Stand)
35lbs / 16kg

Packing Data (SK23 Oven Stand)
40lbs / 18kg
3.2ft³ / 0.09m3

Width	24⅞" / 630mm
Height	35½" / 900mm
Depth	6" / 152mm

INSTALLATION CLEARANCES

Rear	1" / 25mm
LH Side	1" / 25mm
RH Side	1" / 25mm

CLEARANCE FROM SOURCES OF HEAT
A minimum distance of 12" / 300mm from the appliance sides is required

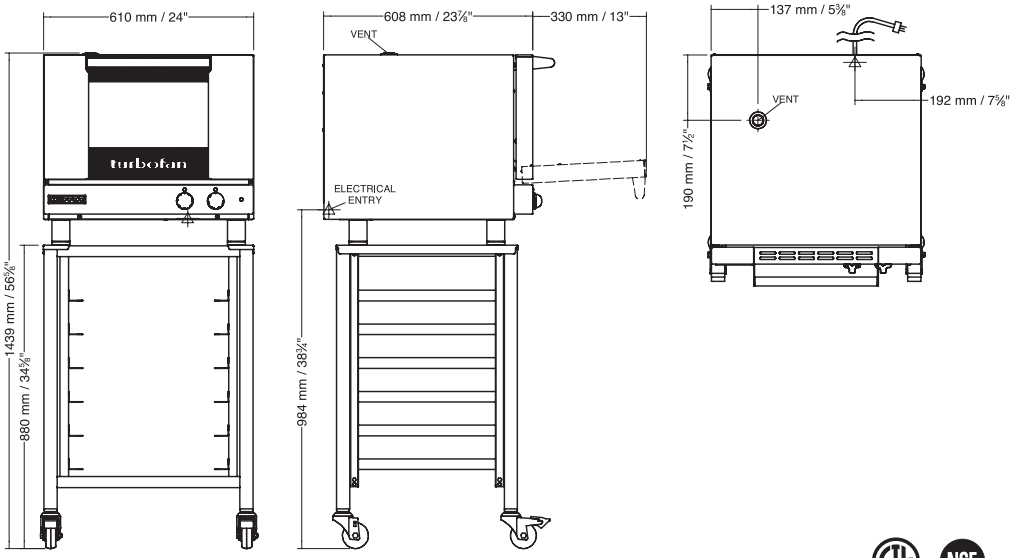

MOFFAT®
www.moffat.com

U.S.A.
Moffat Inc
3765 Champion Boulevard
Winston-Salem
North Carolina 27105
Ph Toll Free 1-800-551 8795
Ph 336-661 0257
Fax 336-661 9546
Email sales@moffat.com
www.moffat.com

Manufactured by:
Moffat Limited
16 Osborne Street PO Box 10-001
Christchurch 8081 New Zealand

ISO9001 Quality Management Standard

Designed and manufactured by MOFFAT®

ISO9001
All Turbofan products are designed and manufactured by Moffat using the internationally recognised ISO9001 quality management system, covering design, manufacture and final inspection, ensuring consistent high quality at all times.

In line with policy to continually develop and improve its products, Moffat Limited reserves the right to change specifications and design without notice.

© Copyright Moffat Ltd
Moffat 1270 / 3.12