Item No. _____
Quantity _____

BEVERAGE-AIR

3779 Champion Blvd., Winston-Salem, NC 27105
1-888-845-9800 Fax# 1-336-245-6453
http://www.Beverage-Air.com

BOTTOM MOUNTED REACH-IN FREEZERS

Horizon Series
Solid Doors and Glass Doors

MODEL:
HBF23-1 / HBF23-1-G
HBF27-1 / HBF27-1-G
HBF49-1 / HBF49-1-G
HBF72-1 / HBF72-5-G

CUSTOMER'S CHOICE FOR A HOT KITCHEN
Tested & Certified to Ambient Class of 100°F

3 Year Parts/Labor Warranty
Additional 2 Year Compressor Warranty

CABINET CONSTRUCTION

- Exterior—Stainless steel interior and exterior standard.
- Insulation—foamed-in-place CFC and HCFC-free polyurethane insulation.
- One-piece grille allows easy removal/installation for preventative maintenance.

ELECTRONIC CONTROL

- Electronic thermostat with manual defrost button provides a digital display of cabinet temperatures, which includes status indicators and key pad for any necessary temperature adjustments.

REFRIGERATION SYSTEM

- Bottom mount balanced refrigeration system for better ergonomics.
- Automatic condensate evaporation system for energy efficiency.
- Forced-air system ensures uniform distribution of airflow throughout the entire cabinet to ensure even product temperatures. Solid and door models are designed to maintain -15 - 0°F
- Self-contained refrigeration system uses environmentally friendly (CFC and HCFC-free) R404A refrigerant.
- Defrost system is automatic, time-initiated and temperature terminated operation.

DOORS

- Choose from full solid door or full glass door configuration.
- **Glass door units only**: Highly efficient triple pane glass. Glass is heated to prevent any condensation formation. Inside and outside panes are tempered for added safety.
- Anti-microbial door handles and door locks are standard.
- Spring-loaded hinges standard. Positive seal self-closing door(s) with 120° stay open feature.
- Plug-in magnetic door gaskets of one piece construction, removable without tools for ease of cleaning.

SHELVING

- Three (3) heavy duty epoxy coated wire shelves per section standard. Four (4) shelf clips included per shelf (field installed).
- Shelves are adjustable in ½" increments.

MODEL FEATURES

- Incandescent interior lighting—*solid door units*. Fluorescent interior lighting—*glass door units*.
- LED lighting option—*glass door units only*.
- 6" heavy-duty casters included, two with brakes standard. 3" casters or 6" legs optional.
- Pre-wired plug for 115/60/1 phase.
  HBF72-5-G powered by 115/208-230 volts is designed for field wiring (requires 4-wire electrical circuit, hard-wired).
- Epoxy coated evaporator prevents corrosion.
- ENERGY STAR® Qualified
- UL-EPH and CUL for open food product.

HBF23-1
(SHOWN WITH FULL SOLID DOOR)
Full Glass Door model available

HBF27-1
(SHOWN WITH FULL SOLID DOOR)
Full Glass Door model available

HBF49-1
(SHOWN WITH FULL SOLID DOOR)
Full Glass Door model available

***Note**: Not all markings may apply to all model variations.

Available From:

Model Specified	_____	**Store#**	_____
Location	_____	**Quantity**	_____

BEVERAGE-AIR

Horizon Bottom Mount Freezers

Models: HBF23, HBF27, HBF49, HBF72

MODEL	HBF23	HBF27	HBF49	HBF72	HBF72 GLASS DOOR
EXTERNAL DIMENSIONAL DATA					
Length Overall (inches) Length Overall (mm)	27 1/4” 692	30” 762	52” 1321	75” 1905	75” 1905
Depth Overall (inches) - *includes handle* Depth Overall (mm) - *includes handle*	33 3/4” 857	33 3/4” 857	33 3/4” 857	33 3/4” 857	33 3/4” 857
Height Overall— (inches) / (mm) *Add 6” for legs or casters*	78” / 1981	78” / 1981	78” / 1981	78” / 1981	78” / 1981
Number of doors	1	1	2	3	3
Depth with Door Open 90 °	60”	60”	60”	60”	60”
INTERNAL DIMENSIONAL DATA					
NET Capacity (cubic ft.) NET Capacity (Liters)	23 651	27 765	49 1388	72 2039	72 2039
Internal Length Overall (inches) Internal Length Overall (mm)	24” 610	27” 686	49” 1245	72” 1829	72” 1829
Internal Depth Overall (inches) Internal Depth Overall (mm)	28 1/2” 724	28 1/2” 724	28 1/2” 724	28 1/2” 724	28 1/2” 724
Internal Height Overall—(inches) Internal Height Overall—(mm)	61 3/4” 1569	61 3/4” 1569	61 3/4” 1569	61 3/4” 1569	61 3/4” 1569
Number of shelves	3	3	6	9	9
ELECTRICAL DATA					
Full Load Amperes 115/60/1	10.9 A	11.9 A	11.9 A	11.9 A	15 A /208-230v*
REFRIGERATION DATA					
Horsepower	1/2	3/4	3/4	3/4	2 @ 1/2
WEIGHT DATA					
Gross Weight (Crated lbs) Solid / Glass	300 / 325	373 / 400	530 / 560	715	775
Gross Weight (Crated kg) Solid / Glass	136 / 147	169 / 181	240 / 254	324	352

PLAN VIEWS

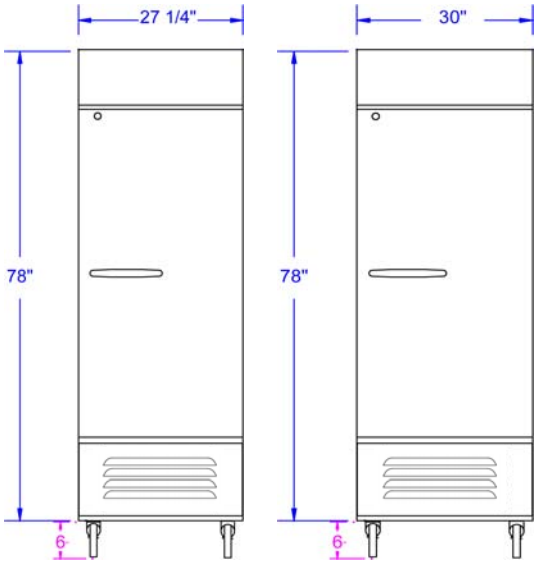

HBF23 HBF27

ENERGY STAR 5 YEAR COMPRESSOR WARRANTY USA MADE IN USA

***Note:** Freezers powered by 115/208-230 volts are designed for field wiring (requires 4-wire electrical circuit, hard-wired).

Note: Not all markings may apply to all model variations.

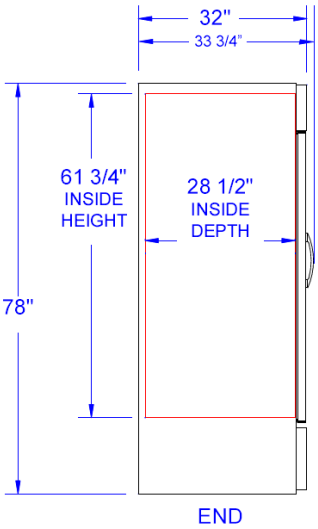

COMMON END

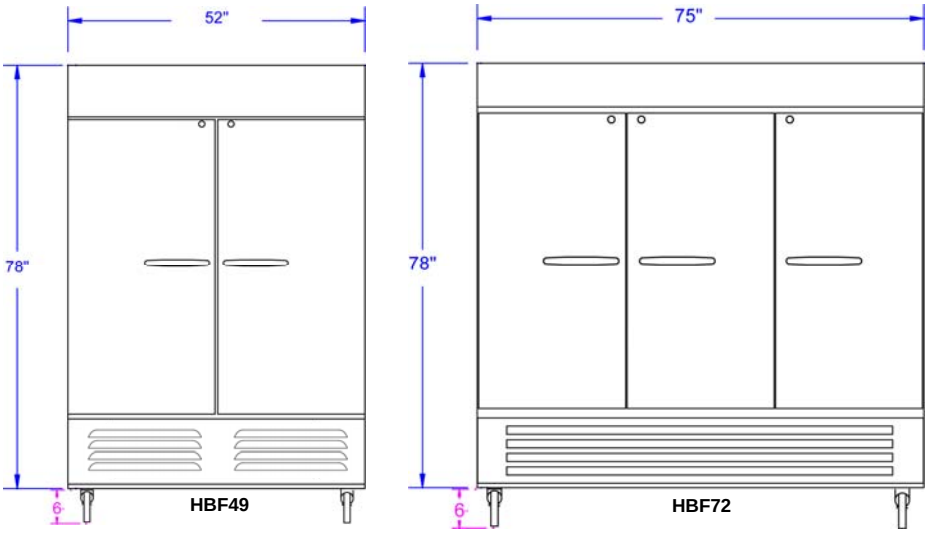

HBF49 HBF72

BEVERAGE-AIR® CORPORATION

3779 Champion Blvd. • Winston-Salem, NC 27105 USA • (336) 245-6400 • Fax (336) 245-6453 • (888) 845-9800 • www.beverage-air.com

Specifications are subject to change without prior notice. 04/13