ITEM #_____

www.americanrange.com

AMERICAN RANGE

Quality Commercial Cooking Equipment

ARWR

ARWR

American Range ARWR series of wok ranges are design engineered to provide years of dependable service.Heavy gauge construction and stainless steel sides and front for durability and easy cleaning. The top is heavy gauge steel with welded on stubs to firmly hold the wok. A large aluminum lever handle for the control valve facilitates “knee control” allowing hands free cooking. The standard 20 tip jet burner gives 125,000 BTU/hr heat capacity, with a stainless steel standing pilot for instant ignition.

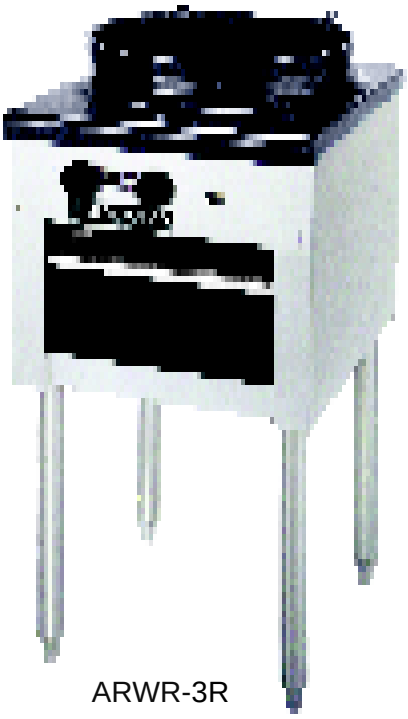

ARWR-3R

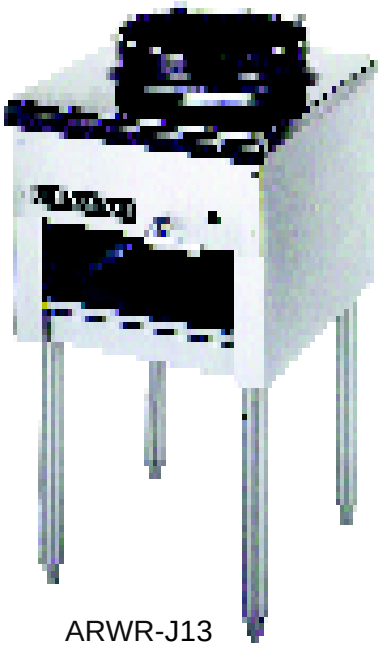

ARWR-J13

ARWR

STANDARD FEATURES

- Stainless steel front and sides.
- Heavy gauge steel with welded-in 2” high wok opening.
- Painted finish.
- Heavy gauge chassis.
- 20 Tip 125,000 BTU/hr. jet burner.
- Brass control valve with large aluminum handle.
- Adjustable bullet feet for leveling.
- AGA and CGA design certified, NSF listed.
- One year limited warranty, parts and labor.
- Tempura style with 3-ring burner (90,000 BTU/hr).
- 13” or 16” diameter wok rings, other sizes also available, call factory.
- Water wash style with various sized openings, call for details and
- pricing.

Optional swivel casters available.

HEAVY DUTY WOK RANGES

ARWR Series

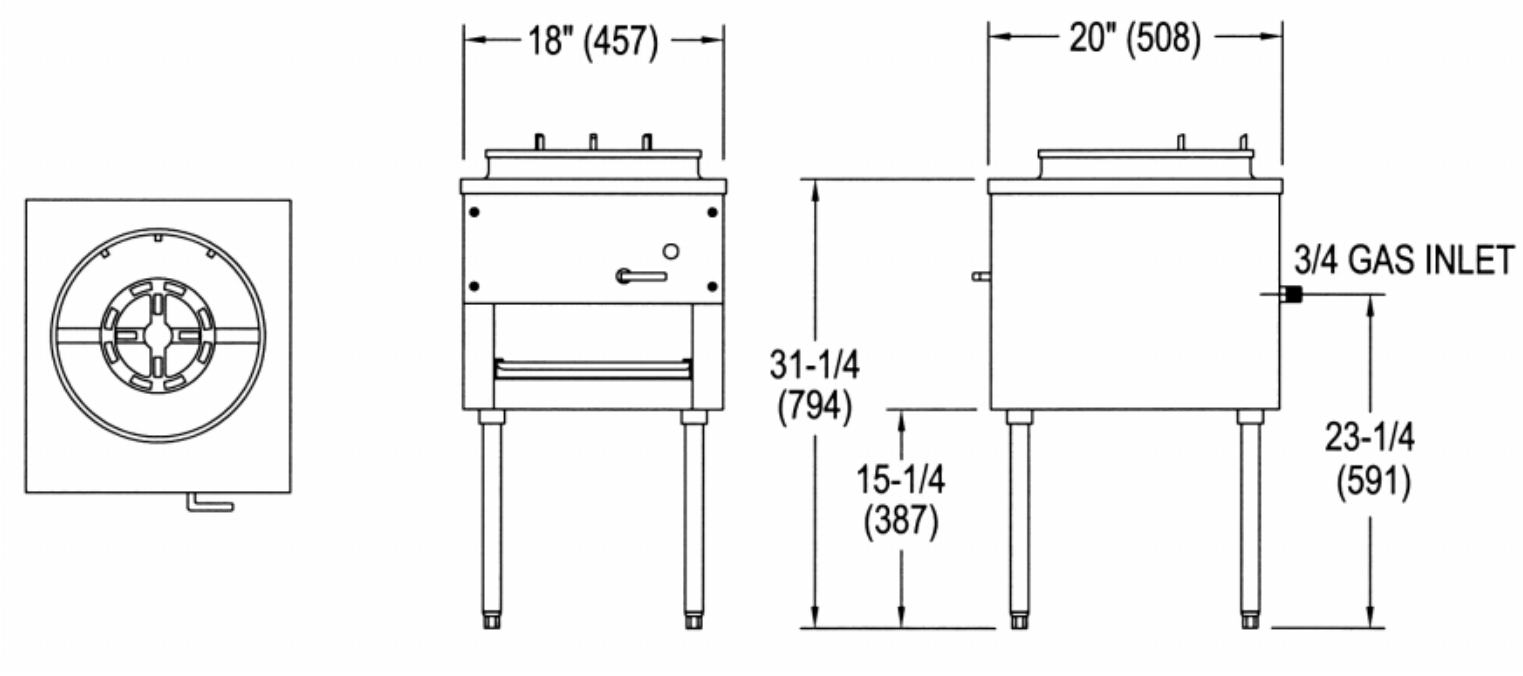

HEAVY DUTY WOK RANGES

MODEL	WOK DIA.	WIDTH	DEPTH	HEIGHT	BURNERS	TOTAL BTU	KW	SHIP. WT. Lbs.	Kg
ARWR-3R	16"	18"	20"	32 1/2"	3-RING	90,000	26.37	130	58
ARWR-J13	13"	18"	20"	32 1/2"	20 tip jet	125,000	36.63	110	50
ARWR-J16	16"	18"	20"	32 1/2"	20 tip jet	125,000	36.63	110	50

STANDARD FEATURES

- Stainless steel front and sides.
- Heavy gauge steel body with welded wok opening.
- 20 Tip 125,000 BTU/hr. jet burner.
- Brass control valve with large aluminum handle.
- Adjustable bullet feet for leveling.
- AGA and CGA design certified, NSF listed.
- One year limited warranty, parts and labor.

OPTIONAL FEATURES

- Tempura style with 3-ring burner (90,000 BTU).
- 13" (330) or 16" (406) diameter wok rings, other sizes also available, call factory.
- Water wash style with various sized openings, call for details and pricing.
- Swivel casters.
- Non clogging jet available.

Gas: Manifold pressure is 5.0" W.C. for natural gas or 10.0" W.C. for propane gas. Specify type of gas and altitude if over 2000 feet. 3/4" NPT Gas inlet.
Clearances: For use in non combustible locations only, Clearance to non combustible construction 0" sides and back.

American Range Corporation is a quality manufacturer of commercial cooking equipment. Because of continuing product improvements these specifications are subject to change without prior notice.

AMERICAN RANGE
Quality Commercial Cooking Equipment
13592 Desmond St. Pacoima CA 91331
Tel: 818-897-0808 Fax:818-897-1670
KaTom Restaurant Supply, Inc.