Mega-Top Pizza Prep Table with Refrigerated Base (Side Motor)

1 Door, 3 Drawer - 13.7 Cu. Ft.

NPT48-D3

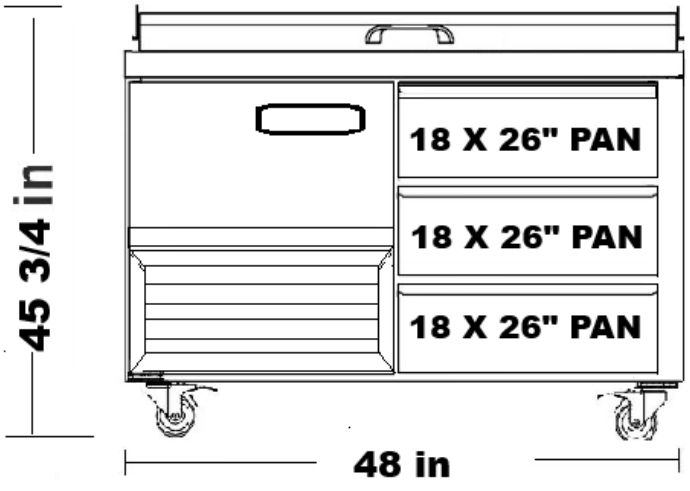

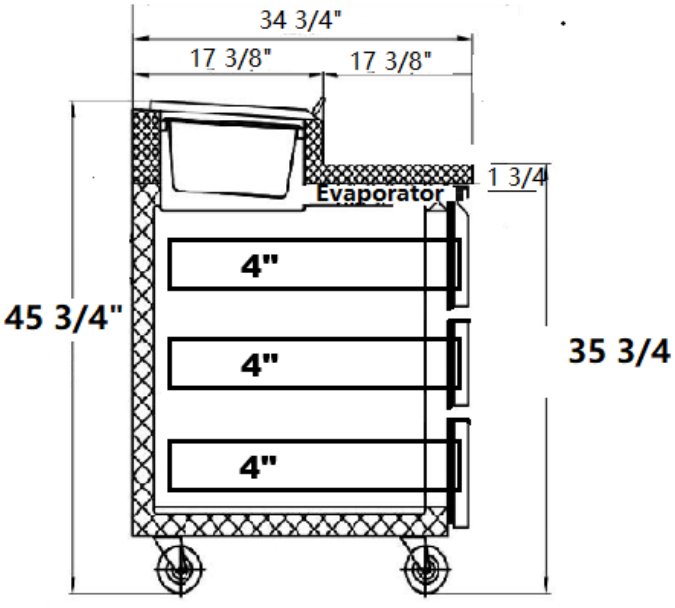

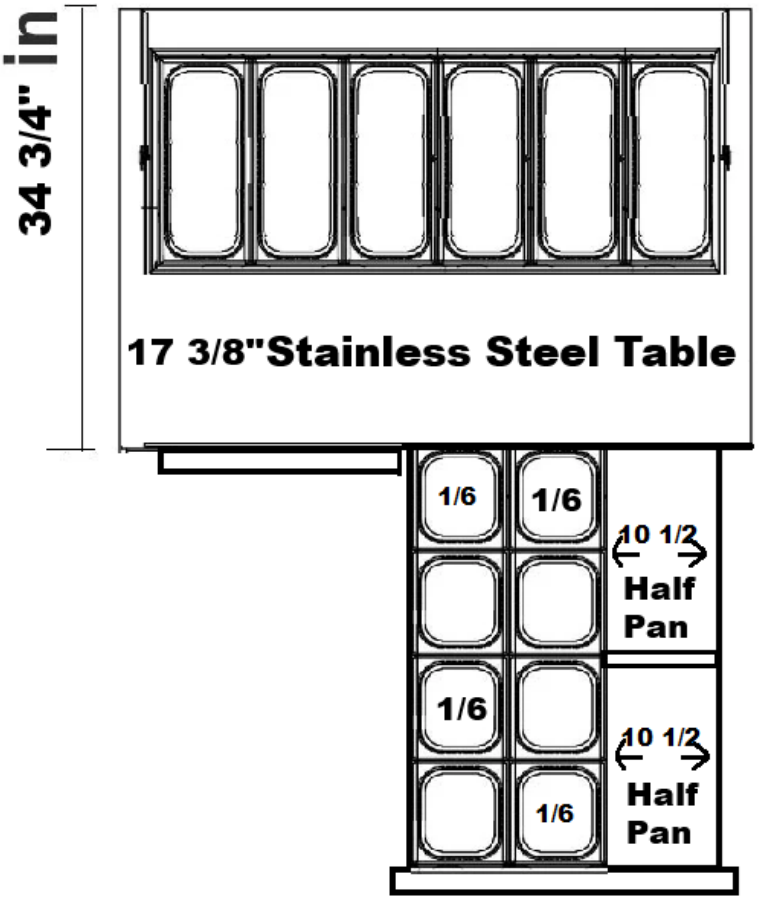

FRONT VIEW

