Electrolux

Modular Cooking Range Line
Pasta Cooker, electric, 10.5gal (2 wells)

ITEM #

MODEL #

NAME #

SIS #

AIA #

Modular Cooking Range Line

Pasta Cooker, electric, 10.5gal (2 wells)

391204 (E9PCEH2MF2)	Electric Pasta Cooker, 10.5gal (40LT) 2 WELLS - 208V/3ph/60Hz

Short Form Specification

Item No.

Pasta Cooker, electric, Pair of 10.5 gallon (40 Lt) tanks, 66lb/hour capacity each, automatic starch removal, automatic low water level controls, 9 position energy controls, 316 stainless steel tank, stainless steel cabinet & legs

APPROVAL:

Main Features

- In addition to cooking pasta, the appliance can be used for noodles of every kind, rice, dumplings and vegetables.
- Unit to have infared heating system positioned beneath the base of the well.
- Water basin in 316-L type Stainless steel.
- Water basin is seamlessly welded into the top of the appliance.
- Provided with integrated drip zone on which baskets can be placed for draining purposes.
- Automatic starch removal function during cooking: improved water quality over time.
- Automatic low-water level shut-off: no accidental over-heating.
- Easy-to-use control panel.
- Continuous water filling regulated through a manual water tap.
- Large drain with manual ball-valve for fast emptying of well.
- All major compartments located in front of unit for ease of maintenance.
- IPX5 water resistance certification.
- The special design of the control knob system guarantees against water infiltration.
- One piece pressed 0.07" (2mm) work top in Stainless Steel.
- Unit delivered with four 2" (50mm) legs in stainless steel as standard (all round Stainless steel kick plates as option).
- 10.5gal (40lt) water basins.

Construction

- All exterior panels in Stainless Steel with Scotch Brite finishing.
- Model has right-angled side edges to allow flush fitting joints between units, eliminating gaps and possible dirt traps.

Included Accessories

- 2 of Door for open base cupboard — PNC 206350

Optional Accessories

- Junction sealing kit — PNC 206086 ❑
- Kit 4 wheels - 2 swivelling with brake - it is mandatory to install base support and wheels — PNC 206135 ❑
- Flanged feet kit — PNC 206136 ❑
- Frontal kicking strip for concrete installation 800 mm — PNC 206148 ❑
- Frontal kicking strip for concrete installation, 39 3/8" wide — PNC 206150 ❑
- Frontal kicking strip for concrete installation, 47 1/4" wide — PNC 206151 ❑
- Frontal kicking strip for concrete installation, 63 " wide — PNC 206152 ❑
- 2 side kicking strips for concrete installation — PNC 206157 ❑

Electrolux Professional, Inc.
www.electroluxusa.com/professional
10200 David Taylor Drive, Charlotte, NC 28262 • Telephone Number: 866-449-4200 • Fax Number: 704-547-7401

Electrolux
Modular Cooking Range Line
Pasta Cooker, electric, 10.5gal (2 wells)

- Frontal kicking strip, 31 1/2" wide PNC 206176 ❑
- Frontal kicking strip, 39 3/8" wide PNC 206177 ❑
- Frontal kicking strip, 47 1/4" wide PNC 206178 ❑
- Frontal kicking strip, 63" wide PNC 206179 ❑
- 2 side kicking strips PNC 206180 ❑
- 2 panels for service duct for single installation PNC 206181 ❑
- Lid and lid holder for 10.5 gallon (40 Lt) pasta cooker PNC 206190 ❑
- 2 panels for service duct for back to back installation PNC 206202 ❑
- 4 feet for concrete installation PNC 206210 ❑
- Set of three ergonomic baskets for 10.5 gallon (40 Lt) pasta cooker. To be used with support PNC 206238 PNC 206233 ❑
- Single ergonomic basket for 10.5 gallon (40 Lt) pasta cooker. To be used with support PNC 206238 PNC 206237 ❑
- Support for 10.5 gallon (40 Lt) pasta cooker square baskets PNC 206238 ❑
- Chimney upstand, 800mm PNC 206304 ❑
- - NOT TRANSLATED - PNC 206308 ❑
- - NOT TRANSLATED - PNC 206309 ❑
- Energy saving device for pasta cookers PNC 206344 ❑
- Door for open base cupboard PNC 206350 ❑
- - NOT TRANSLATED - PNC 206353 ❑
- Base Support Assembly, 48" (1200mm) wide, for feet/wheels PNC 206368 ❑
- Base Support Assembly, 64" (1600mm) wide, for feet/wheels PNC 206369 ❑
- Base Support Assembly, 80" (2000mm) wide, for feet/wheels PNC 206370 ❑
- Base support for feet or wheels (lateral) for pastacookers (900XP) PNC 206372 ❑
- Rear paneling - 800mm PNC 206374 ❑
- Rear paneling - 1000mm PNC 206375 ❑
- Rear paneling - 1200mm PNC 206376 ❑
- - NOT TRANSLATED - PNC 206395 ❑
- CHIMNEY GRID NET, 400MM-700&900LINE PNC 206400 ❑
- 2 square baskets, left and right, for 10.5 gallon pasta cooker. 6 baskets can be fitted in 900 pasta cooker. To be used with support PNC 206238 PNC 206433 ❑
- Side handrail-right/left hand PNC 216044 ❑
- FRONTAL HANDRAIL 800 MM PNC 216047 ❑
- FRONTAL HANDRAIL 1200 MM PNC 216049 ❑
- FRONTAL HANDRAIL 1600 MM PNC 216050 ❑
- 2 side covering panels for free standing appliances PNC 216134 ❑
- Large handrail - portioning shelf, W=31 1/2" PNC 216186 ❑
- Set of three baskets (11" x 6") for 10.5 gallon (40 Lt) pasta cooker PNC 927210 ❑
- Pair of baskets (11" x 9") for 10.5 gallon (40 Lt) pasta cooker PNC 927211 ❑
- Set of three portion baskets for 10.5 gallon (40 Lt) pasta cooker - round (requires support for baskets PNC 927219) PNC 927212 ❑
- Set of six single-portion baskets for 10.5 gallon (40 Lt) pasta cooker - round - requires support rack (PNC 927219 or 960644) PNC 927213 ❑
- Basket (11" x 18") for 10.5 gallon (40 Lt) pasta cooker PNC 927216 ❑
- Support for 10.5 gallon (40 Lt) pasta cooker round basket PNC 927219 ❑
- Top support for set of six pasta cooker round baskets. An alternative to 927219 when set of six round baskets used PNC 960644 ❑

Modular Cooking Range Line
Pasta Cooker, electric, 10.5gal (2 wells)

Front

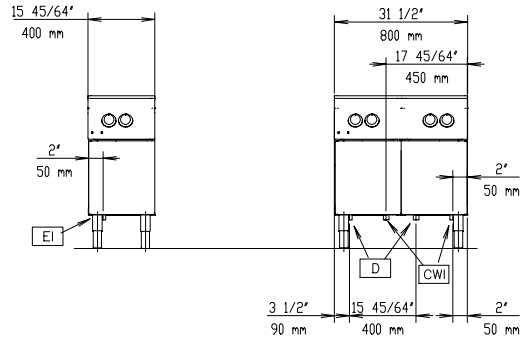

Top

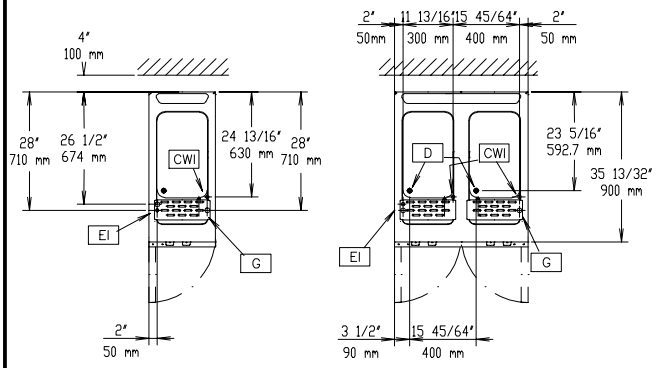

D = Drain
EI = Electrical connection
EQ = Equipotential screw
WI = Water inlet

Side

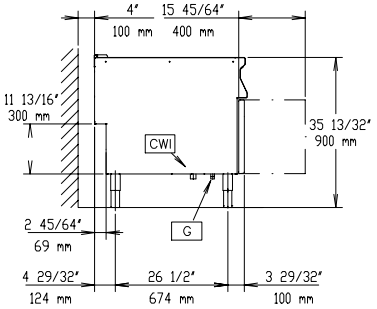

Electric

Supply voltage:	
391204 (E9PCEH2MF2)	208 V/3 ph/50/60 Hz
Electrical power, max:	20 kW
Total Watts:	20 kW

Water:

Drain "D":	1"
Incoming Cold/hot Water line size:	3/4"
Total hardness:	5-50 ppm

Electrolux *recommends the use of treated water, based on testing of specific water conditions.*

Please refer to user manual for detailed water quality information.

Key Information:

Well Capacity (MAX):	10.57 gal (40 litres) MAX
External dimensions, Width:	31 1/2" (800 mm)
External dimensions, Depth:	35 7/16" (900 mm)
External dimensions, Height:	33 7/16" (850 mm)
Net weight:	254 lbs (115 kg)
Shipping width:	40 3/16" (1020 mm)
Shipping depth:	33 7/8" (860 mm)
Shipping height:	44 1/16" (1120 mm)
Shipping weight:	309 lbs (140 kg)
Shipping volume:	34.69 ft³ (0.98 m³)

If appliance is set up or next to or against temperature sensitive furniture or similar, a safety gap of approximately 150 mm should be maintained or some form of heat insulation fitted.

The company reserves the right to make modifications to the products without prior notice. All information correct at time of printing.

2017.03.15