Electrolux PROFESSIONAL

SkyLine ProS Electric Boilerless Combi Oven 102 208V

ITEM #

MODEL #

NAME #

SIS #

AIA #

219653 (ECOE102K3L0) SKYLINE ProS OVEN 10 FULL SHEET PANS (18" X 26")TOUCH-ELECTRIC 208V -BOILERLESS

Short Form Specification

Item No.

Combi oven with high resolution full touch screen interface, multilanguage, IPX5, ETL, EnergyStar, Ergocert
- BOILERLESS
- OptiFlow: air distribution system with 7 fan speed levels
- SkyClean: Automatic and built-in self cleaning system with integrated descale of the steam generator.
- 2 Cooking modes: Programs, Manual
- Special functions: MultiTimer cooking, Plan-n-Save, SkyHub homepage, agenda MyPlanner, automatic backup mode to avoid downtime
- USB port to download HACCP data, programs and settings. Connectivity to the cloud ready
- 6-point multi sensor core temperature probe
- Triple-glass door with double LED lights line
- Includes (5) 922076 stainless steel grids

APPROVAL:

Main Features

- Instant steam generator: Boilerless steaming function to add and retain moisture for high quality, consistent cooking results. Automatic moistener (11 settings)
- Dry, hot convection cycle (77 °F - 575 °F/25°C - 300 °C): ideal for convection cooking.
- EcoDelta cooking: cooking with food probe maintaining preset temperature difference between the core of the food and the cooking chamber.
- Programs mode: a maximum of 1000 recipes can be stored in the oven's memory, to recreate the exact same recipe at any time. The recipes can be group in 16 different categories to better organize the menu. 16-step cooking programs also available.
- MultiTimer: Special feature to manage up to 20 different cooking cycles at the same time in the same cavity guaranteeing even cooking results. Up to 200 MultiTimer available programs
- Reversible Fan: 7 speed fan levels from 300 to 1500 RPM with reverse rotation for optimal evenness. Fan stops in less than 5 seconds when door is opened.
- Picture Management: upload full customized images of cooking cycles or food items
- Automatic cool-down and pre-heat function
- Different chemical options available: solid (phosphate-free), liquid (requires optional accessory).
- GreaseOut: predisposed for integrated grease drain and collection for safer operations (dedicated base as optional accessory).
- USB port: to download HACCP data, share cooking programs and configurations. USB port also allows to plug-in sous-vide probe (optional accessory).
- Back-up mode: self-diagnosis is automatically activated if a failure occurs to avoid downtime.
- 6-point multi sensor core temperature probe for maximum precision and food safety.
- Capacity: 10 full sheet pans or 20 half sheet/hotel pans.
- OptiFlow air distribution system to achieve maximum performance in chilling/heating eveness and temperature control thanks to a special design of the chamber.

Construction

- Seamless hygienic internal chamber with all rounded corners for easy cleaning.
- 304 AISI stainless steel construction throughout.
- Front access to control board for easy service.
- IPX 5 spray water protection certification for easy cleaning.
- Supplied with 6 tray rack for full size pans, 2 2/3" pitch.
- Triple thermo-glazed door: with 2 hinged inside panels for easy cleaning and double LED lights line.

User Interface & Data Management

- Touchscreen: High resolution interface (translated into more than 30 languages including Spanish and French) - color-blind friendly panel.
- Make-it-mine: feature to allow full personalization or

Electrolux Professional, Inc.
www.electroluxprofessional.com
4003 Collins Lane Louisville, KY 40245 USA - fax number: 706-447-6228

Electrolux PROFESSIONAL
SkyLine ProS Electric Boilerless Combi Oven 102 208V

locking of the user interface by selecting what is visible on screen

- SkyHub:customizable homepageto allow the user to group their favorite functions for immediate access when operating.
- MyPlanner: on-screen agenda where the user can plan their daily work, set reminders for several users and receive personalized alerts for each activity
- Connectivity: ready for real time access to connected appliances from remote and HACCP monitoring (requires optional accessory).
- e-learning: equipment trainings, how-to guides, and technical documentation easily accessible by scanning QR-Code with any mobile device.
- Data Analytics: automatic consumption visualization at the end of the cycle.

Sustainability

- Human centered design: with 4-star certification for ergonomics and usability.
- Door handle: ergonomic wing-shaped design for hands-free door opening with elbow, to allow simple trays management (Registered Design at EPO).
- Reduced-Power Feature: To consume less energy during customized slow cooking cycles.
- SkyClean: Automatic self cleaning system with integrated descaling of the steam boiler. 5 automatic cycles (soft, medium, strong, extra strong, rinse-only) and green functions to save energy, water, detergent and rinse aid. Also programmable with delayed start.
- Plan-n-Save: the oven organizes the sequence of the chosen cooking cycles to optimize the processes in the kitchen reduxing time and energy consumption.

Included Accessories

- 5 of Aisi 304 stainless steel grid (18" x 26") PNC 922076

Optional Accessories

- Caster kit for base for 61, 62, 101 and 102 oven bases only PNC 922003 ❑
- Pair of half size oven racks, type 304 stainless steel PNC 922017 ❑
- Chicken racks, pair (2) (fits 8 chickens per rack) PNC 922036 ❑
- Single 304 stainless steel grid (12" x 20") PNC 922062 ❑
- Aisi 304 stainless steel grid (18" x 26") PNC 922076 ❑
- External side spray unit PNC 922171 ❑
- Pair of 304 stainless steel full-size grids (18" x 26") PNC 922175 ❑
- Baguette tray, made of perforated aluminum, silicon coated, 16" x 24" PNC 922189 ❑
- Perforated baking tray, made of perforated aluminum, 16" x 24" PNC 922190 ❑
- Baking tray, made of aluminum 16" x 24" PNC 922191 ❑
- Pair of frying baskets PNC 922239 ❑
- Pastry grid 16" x 24" PNC 922264 ❑
- Double-click closing catch for oven door PNC 922265 ❑
- Grid for whole chicken 1/1GN (8 per grid - 2.6 lbs each) PNC 922266 ❑
- USB Probe for sous-vide cooking (only for Touchline ovens) PNC 922281 ❑
- Kit universal skewer rack & (6) long skewer ovens (TANDOOR) PNC 922325 ❑
- Universal skewer pan for ovens (TANDOOR) PNC 922326 ❑
- Skewers for ovens, (6) 14" short (TANDOOR) PNC 922328 ❑
- Multipurpose hook PNC 922348 ❑
- 4 FLANGED FEET FOR 61,62,101,102 OVENS - 2" 100-130MM PNC 922351 ❑
- Grease collection tray (2 2/5") for 62 and 102 ovens PNC 922357 ❑
- Grid for 8 whole ducks (1.8KG, 4LBS) - GN 1/1 PNC 922362 ❑
- Thermal blanket for 102 oven (trolley not included) PNC 922366 ❑
- HOLDER FOR DETERGENT TANK - WALL MOUNTED PNC 922386 ❑
- USB SINGLE POINT PROBE PNC 922390 ❑
- 10 Tray Rack with wheels, Full Sheet Pans, 2 ½" (65mm) pitch for 102 ovens and blast chillers PNC 922603 ❑
- 8 Tray Rack with wheels, Full Size Sheet Pans, 3" (80mm) pitch for 102 ovens and blast chillers PNC 922604 ❑
- Slide-in rack with handle for 62, and 102 combi oven PNC 922605 ❑
- Bakery/pastry tray rack with wheels 400x600mm for 10 GN 2/1 oven and blast chiller freezer, 80mm pitch (8 runners) PNC 922609 ❑
- Open base with tray support for 62 &102 combi oven PNC 922613 ❑
- External connection kit for detergent and rinse aid PNC 922618 ❑
- Stacking kit for electric 62 combi oven placed on 62 electric combi oven or 102 combi oven PNC 922621 ❑
- Trolley for slide-in rack for 62 & 102 ovens and 102 blast chiller. PNC 922627 ❑
- Trolley for mobile rack for 62 on 62 or 102 combi ovens PNC 922631 ❑
- Stainless steel drain kit for all oven sizes (61, 62, 101,102, 201,202)- dia=50mm (2") PNC 922636 ❑
- Plastic drain kit for all oven sizes (61, 62, 101,102,201, 202), dia=50mm (2") PNC 922637 ❑
- Trolley with 2 tanks for grease collection PNC 922638 ❑
- Grease collection kit for open base (2 tanks, open/close device and drain) PNC 922639 ❑
- Banquet rack with wheels holding 51 plates for 102 oven and blast chiller freezer, 75mm pitch (3" 1/3") PNC 922650 ❑
- Dehydration tray, (12" x 20"), H=2/3" PNC 922651 ❑
- Flat dehydration tray, (12" x 20") PNC 922652 ❑
- Heat shield for 102 combi oven PNC 922664 ❑
- Heat shield for stacked ovens 62 on 102 combi ovens PNC 922667 ❑
- Kit to fix oven to the wall PNC 922687 ❑
- Tray support for 62 & 102 oven base PNC 922692 ❑
- 4 adjustable feet with black cover for 61,62 & 101,102 combi ovens, 150-200mm (5 9/10in -7 9/1in) PNC 922693 ❑
- Detergent tank holder for open base PNC 922699 ❑

• Wheels for stacked ovens	PNC 922704	❑
• Mesh grilling grid (12" x 20")	PNC 922713	❑
• Probe holder for liquids	PNC 922714	❑
• 4 high adjustable feet for 61,62 & 101,102 combi ovens, 230-290mm (9in - 11 2/5in)	PNC 922745	❑
• Tray for traditional static cooking, H=100mm (12' x 20")	PNC 922746	❑
• Double-face griddle, one side ribbed and one side smooth, 400x600mm	PNC 922747	❑
• TROLLEY FOR GREASE COLLECTION KIT	PNC 922752	❑
• WATER INLET PRESSURE REDUCER	PNC 922773	❑
• KIT FOR INSTALLATION OF ELECTRIC POWER PEAK MANAGEMENT SYSTEM-6-10 GN OVENS	PNC 922774	❑
• Extension for condensation tube, 37cm	PNC 922776	❑
• Non-stick universal pan (12" x 20" x 3/4 ")	PNC 925000	❑
• Non-stick universal pan (12" x 20" x 1 1/2")	PNC 925001	❑
• Non-stick universal pan (12" x 20" x 2 1/2")	PNC 925002	❑
• Frying griddle double sided (ribbed/ smooth) 12" x 20"	PNC 925003	❑
• Aluminum combi oven grill (12" x 20")	PNC 925004	❑
• Egg fryer for 8 eggs (12" X 20")	PNC 925005	❑
• Flat baking tray with 2 edges (12" x 20")	PNC 925006	❑
• Potato baker GN 1/1 for 28 potatoes (12"X20")	PNC 925008	❑
• Compatibility kit for installation on previous base 62,102	PNC 930218	❑

SkyLine ProS
Electric Boilerless Combi Oven 102 208V

Front

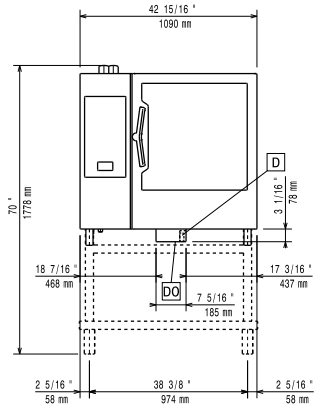

Side

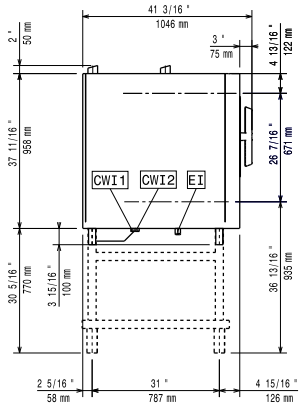

CWI1 = Cold Water inlet

EI = Electrical connection

CWI2 = Cold Water Inlet 2

D = Drain

DO = Overflow drain pipe

Top

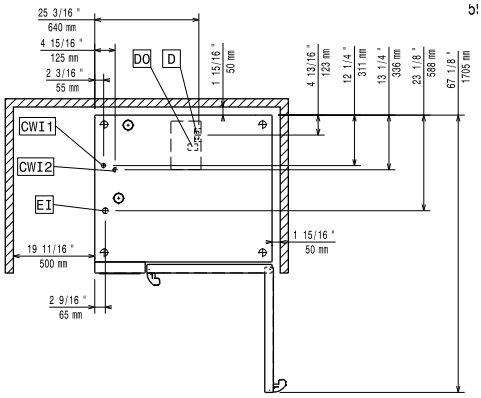

Electric

Supply voltage:	
219653 (ECOE102K3L0)	208 V/3 ph/60 Hz
Electrical power, default:	35.4 kW
Electrical power, max:	35.4 kW

Water:

Water Cold Supply Connection:	3/4"
Cold Water Inlet Connection:	3/4" GHT
Pressure:	15-87 psi (1-6 bar)
Drain "D":	2" (50 mm)
Max inlet water supply temperature:	86°F (30°C)
Chlorides:	<10 ppm
Conductivity:	>50 µS/cm
Water inlet cold 1:	unfiltered
Water inlet cold 2:	filtered

Electrolux Professional recommends the use of treated water, based on testing of specific water conditions.Refer to manual for details

Installation:

Clearance:	Clearance: 2 in (5 cm) rear and right hand sides.
Suggested clearance for service access:	20 in (50 cm) left hand side.

Capacity:

Max load capacity:	220 lbs (100 kg)
Full-size sheet pans:	10 - 18" X 26"

Key Information:

Door hinges:	
External dimensions, Width:	42 15/16" (1090 mm)
External dimensions, Depth:	38 1/4" (971 mm)
External dimensions, Height:	41 5/8" (1058 mm)
Net weight:	389 lbs (176.5 kg)
Shipping width:	44 1/2" (1130 mm)
Shipping depth:	43 5/16" (1100 mm)
Shipping height:	50 3/8" (1280 mm)
Shipping weight:	444 lbs (201.5 kg)
Shipping volume:	56.18 ft³ (1.59 m³)

ISO Certificates

ISO Standards:	ISO 9001; ISO 14001; ISO 45001; ISO 50001

Sustainability

Current consumption:	97.6 Amps

The company reserves the right to make modifications to the products without prior notice. All information correct at time of printing.