BEVERAGE-AIR

Project: _____	AIA#
Item: _____	
Location: _____	SIS#
Approved:	

VISTA® BOTTOM MOUNT REACH-IN REFRIGERATOR

MODEL: RB27HC-1S

RB27HC Solid Door Reach-In Refrigerator

Hydrocarbon Series

7 Year Parts/Labor Warranty
7 Year Compressor Warranty

CABINET CONSTRUCTION

- Stainless steel front and door, gray painted sides
- Gray painted aluminum interior
- Full electronic control
- LED lighting
- Door lock
- Self-closing door with 120˚ stay-open feature, on spring-loaded hinges
- One–piece grille allow easy removal/installation for preventative maintenance
- Three (3) heavy duty epoxy coated wire shelves standard
- 6” Casters standard with (2) brakes

OPTIONS & ACCESSORIES

- Stainless steel universal tray slides (AC)
- Epoxy shelves
- Shelf clips
- 3” Casters or 6” legs
- 6” Flanged/seismic feet
- Remote option* (see note on back page)

REFRIGERATION SYSTEM

- Uses environmentally friendly, energy efficient R290 refrigerant, and meets all regulatory requirements for CARB, SNAP, DOE & more
- Adaptive defrost
- Epoxy coated evaporator coil
- Maintains product temperatures between 36º-38ºF

Please verify qualifying units by visiting:
www.energystar.gov/cfs

3779 Champion Blvd., Winston-Salem, NC 27105
1-888-845-9800 Fax: 1-336-245-6453
Beverage-Air.com Sales@bevair.com

BEVERAGE-AIR

VISTA® Bottom Mount Reach-In Refrigerator
Model: RB27HC-1S

MODEL	RB27HC-1S
EXTERNAL DIMENSIONAL DATA	
Width Overall	30”
Depth Overall with Handle	33 ¾”
Height Overall	84 ⅛”
Number of Doors	1
Depth with Door Open 90°	60 ⅛”
Door Opening (in)	26 ⅞” x 52 ½”
INTERNAL DIMENSIONAL DATA	
NET Capacity (cubic ft.)	25.97
Internal Width Overall (in)	27”
Internal Depth Overall (in)	28 ½”
Internal Height Overall (in)	61 ¾”
Internal Height Useable (in)	55”
Number of Shelves	3
ELECTRICAL DATA	
Full Load Amperes	2.88
Voltage	115/60/1
Nema Plug (8’ cord)	5-15P
REFRIGERATION DATA	
Horsepower	1/4
Capacity (BTU/Hr)	1702
Heat Rejection (BTU/Hr)	2553
Charge (lbs/grams/ounce)	0.1985 / 90 / 3.18
SHIPPING DATA	
Gross Weight (crated lbs)	358 lbs
Height - Crated	85”
Width - Crated	32”
Depth - Crated	36”

*NOTE: Remote units are field wired and come with 6” legs.
Refrigerant must be specified at time of order.

We reserve the right to change specifications and product design without notice. Such revisions do not entitle the buyer to corresponding changes, improvements, additions or replacements for previously purchased equipment. Dimensional tolerances +/- 1⁄4”. Metric dimensions (MM).

Model Views

Required Clearance: Rear 3” & Bottom 3”

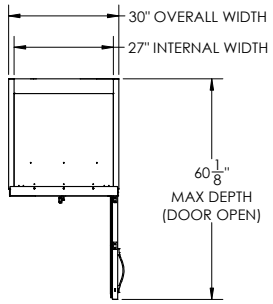

PLAN VIEW

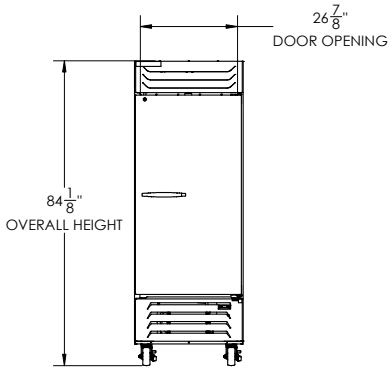

ELEVATION VIEW

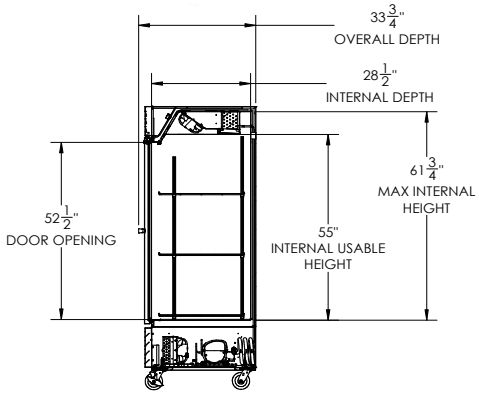

SIDE VIEW

ELECTRICAL CONNECTION

115/60/1
NEMA 5-15P

Unit pre-wired at factory and include 8’ long cord and plug set.

3779 Champion Blvd., Winston-Salem, NC 27105 1-888-845-9800 Fax: 1-336-245-6453 Beverage-Air.com Sales@bevair.com

WELBILT
an Ali Group Company