Glass Frosters

BLACK GLASS FROSTERS

BUILT TO PERFORM, DESIGNED TO DELIVER

The Asber Glass Froster is expertly engineered to maximize capacity, efficiency, and performance, making it the ideal solution for high-volume bar environments. Featuring Asber's exclusive sliding shelf system, this innovative design allows for complete utilization of interior space, increasing overall glass storage capacity by 20–25% within the same footprint compared to standard frosters. The chip-resistant black vinyl exterior finish on the front, sides, and back ensures long-lasting durability and a clean, professional appearance. This finish is specifically chosen for bar applications, offering superior resistance to wear and chipping compared to traditional painted surfaces.

INSULATION & ENERGY EFFICIENCY

High Performance, Environmentally Responsible Design

- Ecomate™ insulation: Industry-leading, eco-friendly technology (ODP-0, GWP-3), provides superior temperature retention and energy-savings even under heavy-duty kitchen conditions.
- Maximum thermal efficiency: 2" thick insulation throughout.

REFRIGERATION SYSTEM & PERFORMANCE

Efficient, Reliable, and Environmentally Friendly

- R290 Hydrocarbon refrigerant: Delivers quicker temperature recovery and lower energy consumption, ensuring environmental responsibility.
- Fully front-breathing, side-mounted refrigeration system maximizes airflow and enables flush installation in tight spaces, against walls or under counters.
- Hermetic compressor system with epoxy-coated evaporator provides long-lasting performance and corrosion resistance operation.
- Electronic controller provides accurate, easy-to-monitor temperature management.
- Temperature range: Maintains 0°F to -7°F in ambient conditions up to 100°F and 65% RH.

CONSTRUCTION & FEATURES

Durable, Safe, and Easy to Maintain

- Exclusive sliding shelf system: Maximizes usable storage area and simplifies glass organization and access.
- Chip-resistant black vinyl exterior: Provides superior scratch and wear resistance versus painted surfaces, for a sleek look in busy retail areas.
- Full stainless-steel interior ensure strength, hygiene, and ease of maintenance.
- Doors lock with a universal key for product security during off-hours.
- Stainless-steel sliding doors with easy, tool-free removal for cleaning.
- Compact and sturdy construction integrates seamlessly into bar layouts and service stations, maximizing storage and cooling efficiency.

CERTIFICATIONS

- NSF-7 Certified: Meets rigorous food safety and sanitation standards.
- ETL Listed: Certified for electrical and mechanical safety.
- DOE Compliant: Meets U.S. Department of Energy efficiency standards.

OPTIONS & ACCESSORIES

- Adjustable legs.
- Single bottle rail.
- Low-profile 3" casters.
- Stainless-steel exterior finish.

AGF 36

AGF 50

MODEL	DOORS	SHELVES	MUGS		VOLTS - FREQUENCY	POWER	AMP.	EXTERIOR DIMENSIONS (in)			SHIPPING	
			22 oz.	10 oz.		HP		Width	Depth	Height	Lbs	ft^3
BLACK GLASS FROSTERS												
AGF 24	1	6	35	96	115V. - 60Hz.	1/3	1.5	24-3/4	27-1/8	36-1/2	168	21.2
AGF 36	1	6	60	162	115V. - 60Hz.	1/3	1.5	36-3/4	27-1/8	36-1/2	207	28.3
AGF 50	2	6	84	231	115V. - 60Hz.	1/2	2.5	49-3/4	27-1/8	36-1/2	269	35.3

SPECIFICATIONS MAY CHANGE WITHOUT PRIOR NOTICE | VALID FOR CONTINENTAL USA & CANADA. | SEP, 2026

ONNERA USA
13105 NW 47th Avenue, Opa Locka FL 33054

Glass Frosters

BLACK GLASS FROSTERS

AGF 24

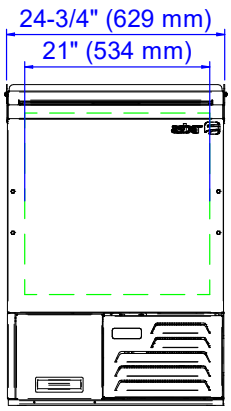

AGF 36

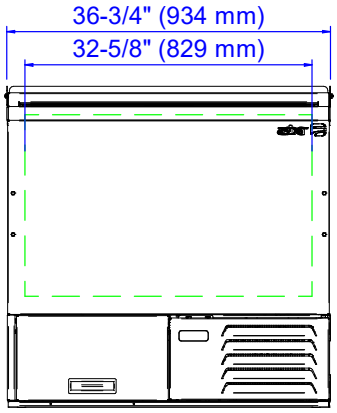

AGF 50

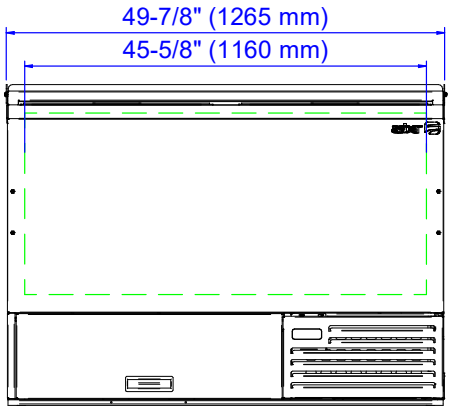

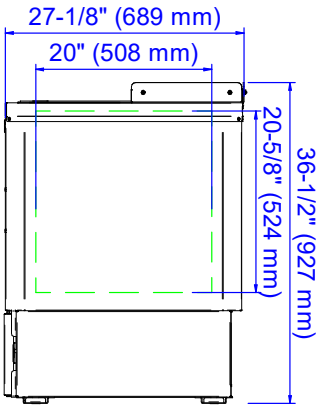

MODEL	AGF 24	AGF 36	AGF 50
ELECTRICAL DATA			
Volts - Frequency	115V. - 60Hz.		
Power (HP)	1/3		1/2
Full Amp Load	1.5		2.5
Plug Type	NEMA 5-15P		
Refrigerant	R290		
INTERIOR DIMENSIONS (in)			
Width	21	32-5/8	45-5/8
Depth	20		
Height	20-5/8		
SHIPPING DIMENSIONS (in)			
Width	29-7/8	39	52
Depth	29-1/8		
Height	41-3/8		

INSTALLATION REQUIREMENTS

1. **ELECTRICAL CONNECTION:** Units pre-wired at factory with chord and NEMA 5-15P plug set included for 115/60/1 phase.
2. **REFRIGERANT:** R290 is classified as A3 flammable refrigerant; risk of fire or explosion due to puncture of refrigerant tubing; follow handling instructions carefully.
3. **RESIDENTIAL APPLICATIONS DISCLAIMER:** Asber assumes no liability for parts or labor coverage for component failure, factory defect or any other damages for units installed in non-commercial foodservice or residential applications.

SPECIFICATIONS MAY CHANGE WITHOUT PRIOR NOTICE | VALID FOR CONTINENTAL USA & CANADA. | SEP, 2026

ONNERA USA
13105 NW 47th Avenue, Opa Locka FL 33054