MENUMASTER® Commercial

Project #: _____

Item #: _____

AIA File #: _____

Specification #: _____

Model MCE14 shown

4 times faster than conventional ovens.

Heavy Volume | Combination Cooking
This category of combination oven is ideal for...

Application:
- Wine bars
- Pubs
- Kiosks
- Supermarkets
- Country club,
- Bakery/cafés
- Convenience stores

Through put potential:
- 6" Inch toasted sub sandwiches, 50 per hour
- 1 portion of 4 frozen crispy chicken wings, 25 portions (84 wings) per hour
- 1 frozen pre-baked fruit filled pastry, 20 per hour
- 12" frozen pizza, 10 per hour
- 1 frozen, pre-baked fruit filled pastry, 20 per hour

Location of oven(s):
- Kitchen shelf
- Kitchen countertop, single or stacked
- Equipment stand, single or stacked

All ACP, Inc. commercial ovens are backed by our Culinary Center. Call us with any question regarding food preparation, menu development and cooking times.
866-426-2621.

Culinary Center ACP

High Speed Combination Oven

Menumaster® Commercial Jetwave™

Power Output

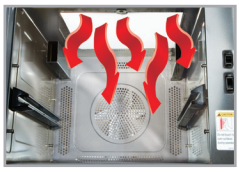

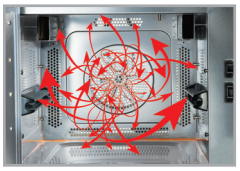

- Convection:
  - 2700 W
  - 150° - 475° F (65° -250° C) temperature range
  - Convected air for enhanced toasting and browning
- Microwave:
  - 1400 W
  - Heats quickly, reduces cooking time

Cuts Costs

- Uses less energy than a conventional oven.
- Eliminates need for pre-cooking and holding.
- Uses quarter size metal trays, pans and screens.

Simplifies Cooking

- Touch pad operation for consistent results.
- Controls are intuitive and simple to use.
- Stores up to 100 menu items.
- Four stage cooking option.
- EZCard Menu Management System updates programming in seconds.
- 1.2 cubic ft. (34 liter) oven capacity.
- Door opens 90°+ for full access to the oven cavity.
- Three rack positions.

Easy to Use and Maintain

- Stainless steel exterior and interior.
- Removable, cleanable air filter and clean filter reminder protect oven components.
- Backed by the ACP, Inc. 24/7 ComServ Support Center 866-426-2621.
- ETL Listed.

Intertek Intertek

ACP INC.

225 49th Ave. Dr. SW Cedar Rapids, IA 52404 U.S.A. | 800-233-2366 | 319-368-8120 | Fax: 319-368-8198 | www.acpsolutions.com

Menumaster® Commercial Jetwave ™ | High Speed Combination Oven

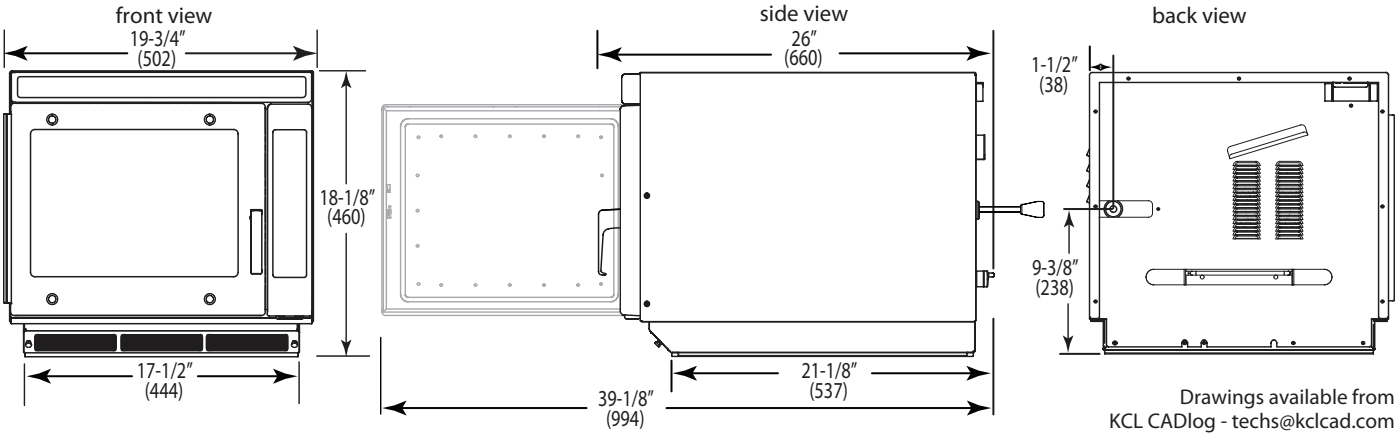

Drawings available from
KCL CADlog - techs@kclcad.com

Specification #:

AIA File #:

Specifications			
Model	MCE14	UPC Code 728028020694	
Cooking Power*	2700W Convection	1400W Microwave	
Configuration	Countertop		
Control System	Touch		
Programmable Control Pads	10		
Total Programmable Settings	100		
Power Levels	11		
Max. Cooking Time	20:00		
Stackable	Yes		
Time Entry Option	Yes		
Microwave Distribution	Rotating antenna, top		
Magnetrons	1		
Display	LED-backlit LCD		
Stage Cooking	Yes, 4		
Door Opening	Lift and pull handle		
Automatic Voltage Sensor	Yes		
EZ Card Menu Management	Yes		
Temperature Range	150° - 475° F (70° - 250° C)		
Air Filter	Yes, removable, with clean filter reminder		
Rack	3 rack positions, removable		
Exterior Dimensions	H 18 ⅛″ (460)	W 19 ¾″ (502)	D** 26″(660)
Cavity Dimensions	H 10 ½″ (267)	W 13″ (330)	D 15″ (381)
Door Depth	39 ⅛″ (994), 90°+ door open		
Usable Cavity Space	1.2 cubic ft. (34 liter)		
Exterior Finish	Stainless steel		
Interior Finish	Stainless steel		
Power Consumption	3200 W, 16 A		
Power Output*	1400 W* Microwave		
Power Source	208 - 240 V, 60 Hz, 20 A single phase		
Plug Configuration / Cord	NEMA 6-20	5 ft. (1.5 m)	
Frequency	2450 MHz		
Product Weight	95 lbs. (43 kg.)		
Ship weight (approx.)	102 lbs. (46 kg.)		
Shipping Carton Size	H 28 ¼″ (718)	W 21 ¾″ (553)	D 21 ½″ (546)

Measurements in ( ) are millimeters
* IEC 60705 Tested ** Includes handle

Specifications

Oven shall combine two cooking modes: convection and microwave for high speed cooking. Control panel shall be programmable with the ability to program up to 100 menu items, single or double digit entry. Programs shall be automatically updated with the use of a memory card system. There shall be 11 power levels and 4 cooking stages. Microwave output shall be 1400 watts and distributed from the top of the cavity. An automatic voltage sensor shall accommodate both 208 and 240 volts. The 2700 watt convection oven shall provide a temperature range from 150° - 475° F (70° - 250° C) in 25° increments . The convection fan located in the back of the cavity shall distribute the heat throughout the cavity to further enhance browning. Maximum microwave cooking time shall be 20 minutes. Oven shall have a stainless steel exterior. 1.2 cubic ft. (34 liter) oven cavity shall be stainless steel construction with stainless oven door. Interior shall have 3 rack positions. Air filter shall be easily accessible and removable from the front of the oven and have a "clean filter" reminder feature. Oven shall be stackable. Microwave oven shall comply with standards set by the U.S Department of Health and Human Services, and ETL listed for safety and sanitation.

Optional Accessories

- Pizza stone
- Drip tray
- Oven paddle

Warranty

Warranty Certificate for this product can be found on the ACP, Inc. website at:
www.acpsolutions.com/warranty

Service

All products are backed by the ACP, Inc. 24/7 ComServ Support Center.

ComServ Commercial Service
866-426-2621

225 49th Ave. Dr. SW Cedar Rapids, IA 52404 U.S.A. | 800-233-2366 | 319-368-8120 | Fax: 319-368-8198 | www.acpsolutions.com

ACP's commitment to quality may mean a change in specification without notice. Product of the U.S.A. © 2012 ACP Inc.™ Printed in the U.S.A.